Series 160

Stainless Steel Pitot Tubes

ASME Design Meets AMCA and ASHRAE Codes

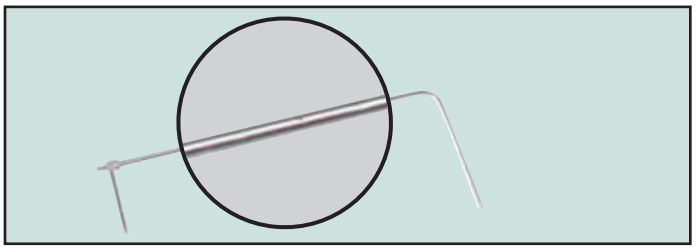

Standard Model 160 Pitot Tube

Ideal for use with our precision manometers and air velocity gages, Dwyer Pitot Tubes are constructed from corrosion resistant stainless steel for a lifetime of service. ASME design meets AMCA and ASHRAE specifications for maximum accuracy over a wide variety of flow conditions. No correction factors required as ASHRAE tip design yields a calibration factor of 1. ASHRAE design needs no calibration! Permanent, stamped insertion depth graduations on sides of 160 series facilitate accurate positioning. Static pressure port is parallel to sensing tube allowing quick, easy alignment of tube with air flow. Low sensitivity to misalignment gives accurate reading even when tube is misaligned up to 15 degrees. Various standard sizes are available for use in ducts as small as 4" dia. or as large as 36 ft. dia. A universal model fits user supplied ¾" schedule 40 (standard) pipe in any length. Several convenient mounting options are available for permanent installations.

- No calibration needed.
- Precisely located, burr-free static pressure holes.
- Hemispherical tip design, best for accuracy if imperfectly aligned and nearly impossible to damage.
- Long lasting 304 SS construction.
- Silver soldered connections for leak-proof operation.
- ASME design meets AMCA and ASHRAE specifications.
- Coefficient of "1."
- 5/16" models rated to 1500°F.
- Extended static connection helps guide tip within recommended 15° of air flow direction.
- Inch graduations on sides of 160 series to quickly determine exact insertion depth.
- Dwyer Air Velocity Calculator, direct reading flow charts and instructions included.
- Use ⅛" models in ducts as small as 4", 5/16" models in ducts 10" or larger.
- Optional mounting gland or split flange make permanent installation fast and simple.

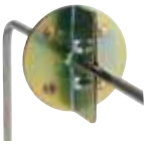

A-158 Split Flange Mounting

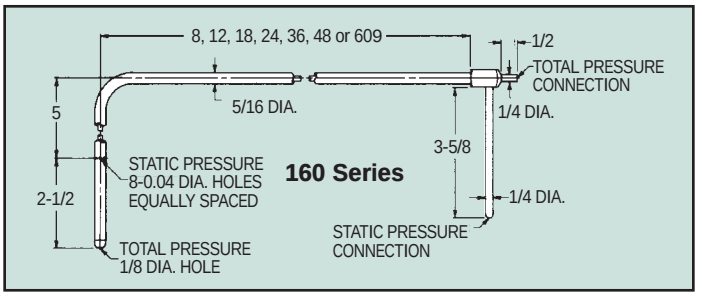

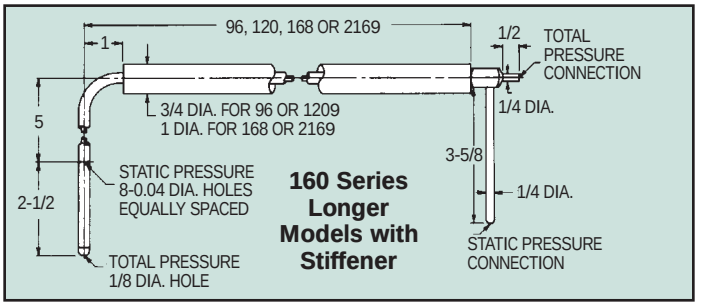

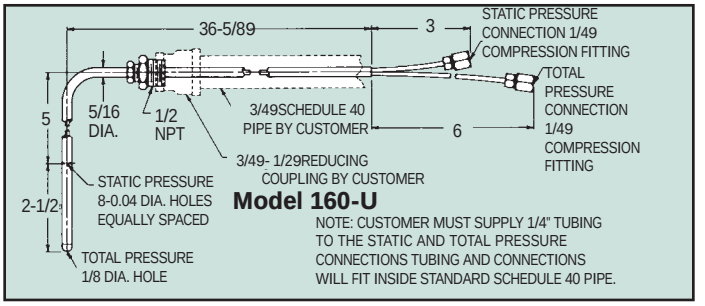

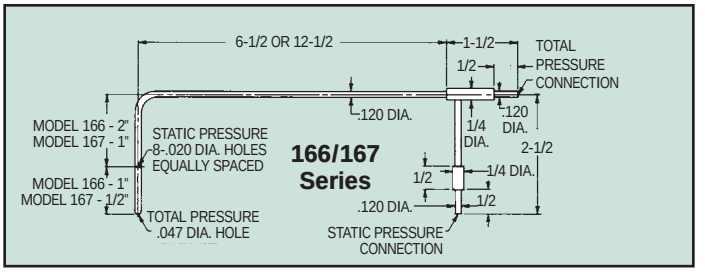

ACCESSORIES

No. A-158 Split Flange Mounting can be added to any Dwyer No. 160 Standard Pitot Tube. Cadmium plated steel. Gasket is pattern for mounting holes. Secure flange loosely to tube, adjust tube depth and tighten screws. Gasket of 1/16" Neoprene fits tightly around tube and against duct for leak-proof seal. Nuts, washers included.

No. A-159 Mounting Gland — No. A-159 Mounting Gland — Versatile adapter slips on any Series 160, 5/16˝ standard Pitot tube made after Dec. 1990. Two-part stainless steel fitting slides over tube and provides permanent, secure mounting. Where duct interior is accessible, use the washers and jam nut supplied. For blind applications or in thicker materials, use model A-156 flange mounting plate. Once tube is adjusted to proper depth and angle, tighten smaller hex bushing to lock position. Graphite bushing inside assures leak-proof seal even at higher temperatures. TFE bushing also available. **NOTE:** For full insertion with this fitting, order next longer Pitot tube.

No. A-397 Step Drill. For fast, convenient installation of Pitot tubes in sheet metal ducts. No center punch needed; automatic de-burring. Drills six sizes from 3/16"-½" in 1/16" increments.

A-159 Mounting Gland is used for both duct mounting and flange mounting. To flange mount, the A-159 must be used with the A-156 flange mounting plate.

A-159 Duct Mounting Gland with 1/2˝ male NPT

A-156 Flange Mounting Plate with 1/2˝ female NPT

A-397 Step Drill

MODELS

Standard 5/16" Dia.		Longer Length w/ Stiffener	
Model Number	**Insertion Length**	**Model Number**	**Insertion Length**
160-8	8"	**160-96**	96"
160-12	12"	**160-120**	120"
160-18	18"	**160-168**	168"
160-24	24"	**160-216**	216"
160-36	36"	**Pocket Size ⅛" Dia.**	
160-48	48"	**166-6**	6"
160-60	60"	**166-12**	12"
Universal Model for ¾" Pipe		**167-6**	6"
160-U	*	**167-12**	12"
Accessories & Options			
A-156 Flange Mounting Plate 1/2˝ female NPT **A-158 Split Flange** **A-159 Mounting Gland** **A-397 Step Drill**		**Compression Fitting** mounting option for 166/167 Series. Add -CF suffix (166-6-CF). Add to prices above	

*Universal model for permanent installation and connection to metal tubing. Make any length Pitot tube with ¾" schedule 40 pipe, ¾" to ½" reducing bushing and ¼" metal tubing.

See also: Ellipsoidals "S" Type Pitot Tubes - page 205